CYUSB3ACC-004A ON SEMICONDUCTOR IMAGE SENSOR INTERCONNECT BOARD

CONTENTS

PAGE	DESCRIPTION
01	TITLE, TABLE OF CONTENTS
02	BLOCK DIAGRAM
03	CONNECTORS
04	REVISION HISTORY

Drawing Numbers	
PCBA	121-60548-01
PCB	600-60548-01
FAB DRW	610-60548-01
ASSY DRW	620-60548-01
SCH DRW	630-60548-01
PCB LBL	899-60548-01

CYPRESS SEMICONDUCTOR
198 CHAMPION COURT
SAN JOSE, CA 95134
(408) 943-2600

CYPRESS SEMICONDUCTOR © 2019

SCH Title : CYUSB3ACC-004A

Page Title :TITLE, TABLE OF CONTENTS

Size	Document Number	Drawn By	Approved By	Rev
A3	630-60548-01	HUSA	ANNR	01

Date: Monday, February 04, 2019 Sheet 1 of 4

CYUSB3ACC-004A BLOCK DIAGRAM

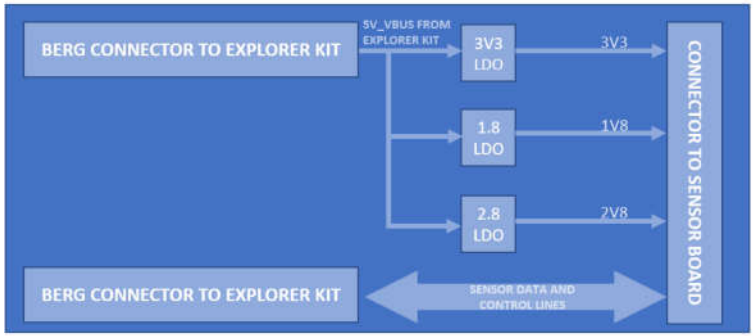

SYSTEM BLOCK DIAGRAM

TOP VIEW

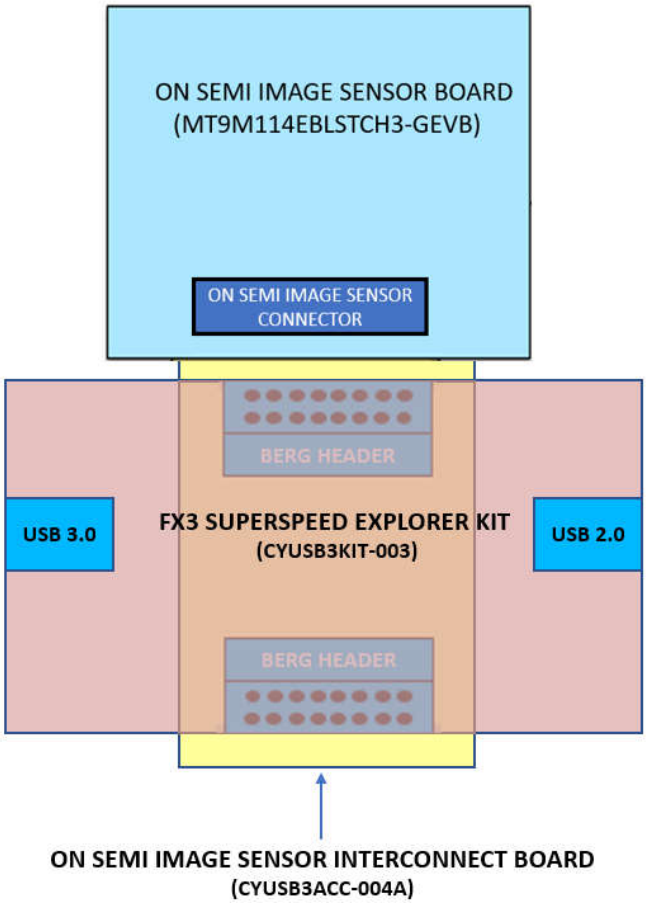

SIDE VIEW

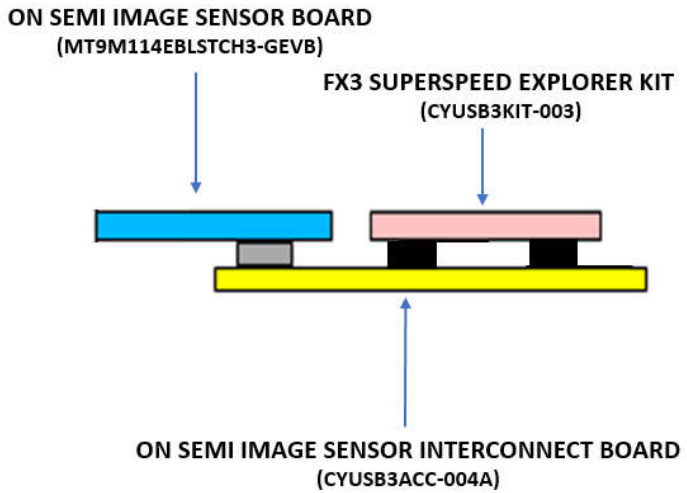

CYPRESS SEMICONDUCTOR
198 CHAMPION COURT
SAN JOSE, CA 95134
(408) 943-2600

CYPRESS SEMICONDUCTOR © 2019

SCH Title : CYUSB3ACC-004A				
Page Title :BLOCK DIAGRAM				
Size A3	Document Number 630-60548-01	Drawn By HUSA	Approved By ANNR	Rev 01
Date: Monday, February 04, 2019		Sheet 2 of 4		

POWER

Note: 1. Capacitors C1,C3,C5 and C7 should be placed close to the IN pin.
2. Capacitors C2, C4, C6 and C8 should be placed close to the OUT pin
3. All LDOs have a maximum output current rating of 200mA

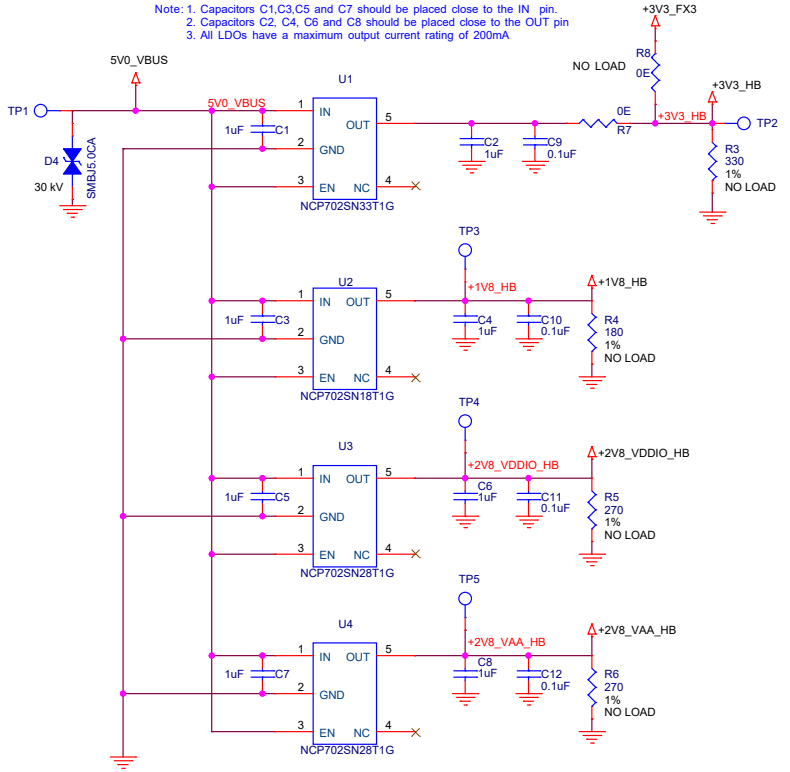

ACCESSORY : BUMPERS



CYUSB3KIT-003 FX3 SUPERSPEED EXPLORER KIT HEADERS

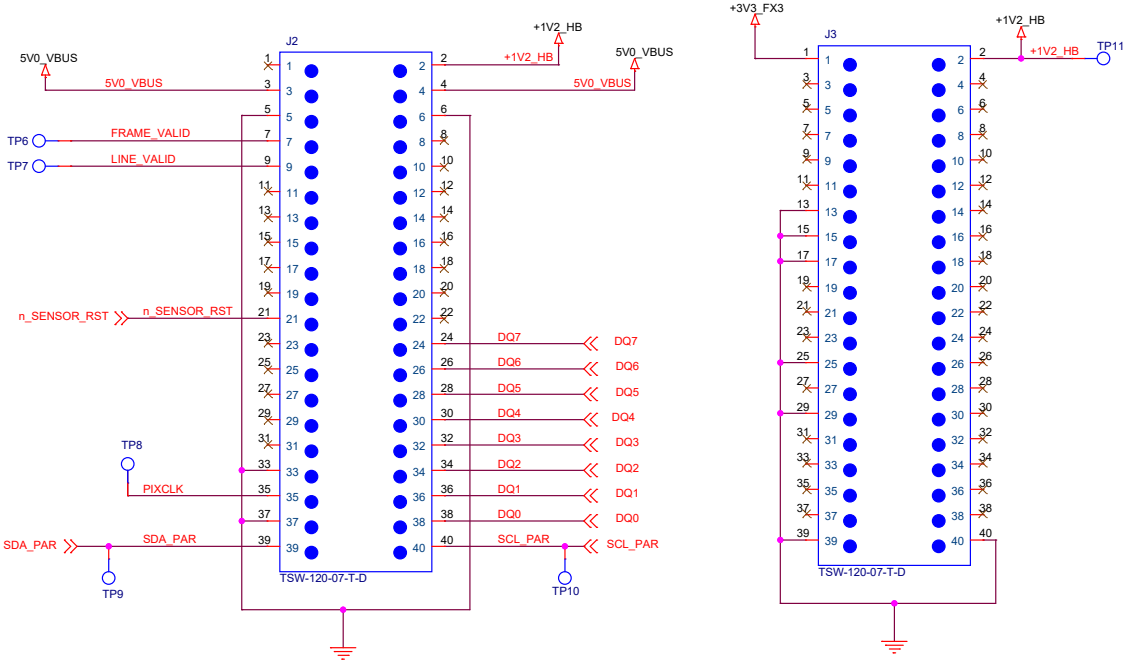

Note 4: DQ0 to DQ7 must be length matched within 5mils.

MT9M114EBLSTCH3-GEVB ON SEMI IMAGE SENSOR BOARD CONNECTOR

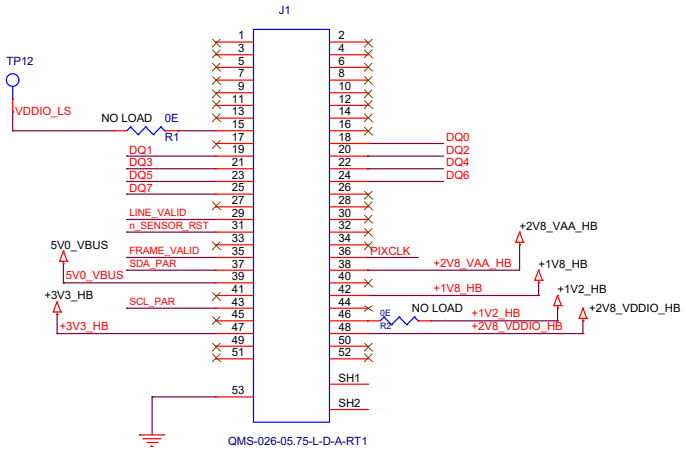

CYPRESS SEMICONDUCTOR
198 CHAMPION COURT
SAN JOSE, CA 95134
(408) 943-2600

CYPRESS SEMICONDUCTOR © 2019

SCH Title : CYUSB3ACC-004A				
Page Title :CONNECTORS				
Size: A3	Document Number: 630-60548-01	Drawn By: HUSA	Approved By: ANNR	Rev: 01
Date: Monday, May 13, 2019		Sheet 3 of 4		

REVISION HISTORY

REV	DESCRIPTION OF CHANGE	DATE
01	INITIAL RELEASE	2019/01/30

CYPRESS SEMICONDUCTOR
198 CHAMPION COURT
SAN JOSE, CA 95134
(408) 943-2600

CYPRESS SEMICONDUCTOR © 2019

SCH Title : CYUSB3ACC-004A

Page Title :REVISION HISTORY

Size	Document Number	Drawn By	Approved By	Rev
A3	630-60548-01	HUSA	ANNR	01

Date: Monday, May 13, 2019 Sheet 4 of 4